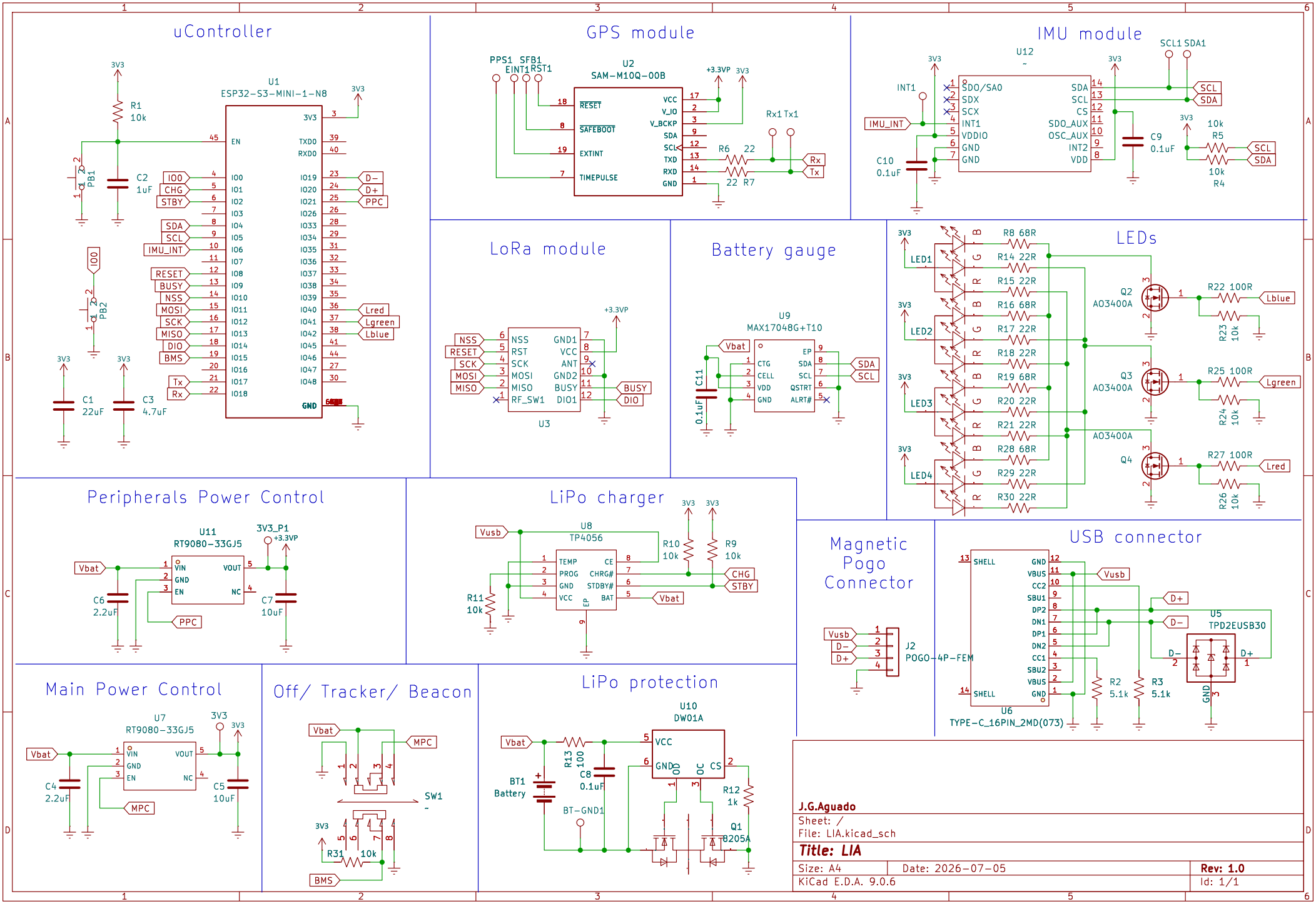
uController
U1
ESP32-S3-MINI-1-N8
R1
10k
C2
1uF
C1
22uF
C3
4.7uF
PB1
PB2
IO0
CHG
STBY
SDA
SCL
IMU_INT
RESET
BUSY
NSS
MOSI
SCK
MISO
DIO
BMS
Tx
Rx
D-
D+
PPC
Lred
Lgreen
Lblue
GPS module
U2
SAM-M10Q-00B
PPS1
SFB1
EINT1
RST1
RESET
SAFEBOOT
EXTINT
TIMEPULSE
VCC
V_IO
V_BCKP
SDA
SCL
TXD
RXD
GND
+3.3VP
R6
22
R7
22
Rx1
Tx1
IMU module
U12
SDO/SA0
SDX
SCX
INT1
VDDIO
GND
SDA
SCL
CS
SDO_AUX
OSC_AUX
INT2
VDD
C10
0.1uF
C9
0.1uF
R5
10k
R4
10k
SCL1
SDA1
LoRa module
U3
NSS
RST
SCK
MOSI
MISO
RF_SW1
GND1
VCC
ANT
GND2
BUSY
DIO1
Battery gauge
U9
MAX17048G+T10
Vbat
C11
0.1uF
CTG
CELL
VDD
GND
EP
SDA
SCL
QSTRT
ALRT#
LEDs
LED1
LED2
LED3
LED4
R8 68R
R14 22R
R15 22R
R16 68R
R17 22R
R18 22R
R19 68R
R20 22R
R21 22R
R28 68R
R29 22R
R30 22R
Q2
AO3400A
Q3
AO3400A
Q4
AO3400A
R22 100R
R23
10k
R25 100R
R24
10k
R27 100R
R26
10k
Peripherals Power Control
U11
RT9080-33GJ5
3V3_P1
+3.3VP
VIN
GND
EN
VOUT
NC
C6
2.2uF
C7
10uF
LiPo charger
U8
TP4056
Vusb
TEMP
PROG
GND
VCC
CE
CHRG#
STDBY#
BAT
EP
R10
10k
R9
10k
R11
10k
CHG
STBY
Magnetic Pogo Connector
J2
POGO-4P-FEM
USB connector
U6
TYPE-C_16PIN_2MD(073)
SHELL
GND
VBUS
CC2
SBU1
DP2
DN1
DP1
DN2
CC1
SBU2
U5
TPD2EUSB30
R2
5.1k
R3
5.1k
Main Power Control
U7
RT9080-33GJ5
C4
2.2uF
C5
10uF
MPC
Off/ Tracker/ Beacon
SW1
R31
10k
BMS
LiPo protection
U10
DW01A
VCC
GND
OD
OC
CS
R13
100
C8
0.1uF
BT1
Battery
BT-GND1
R12
1k
Q1
8205A
J.G.Aguado
Sheet: /
File: LIA.kicad_sch
Title: LIA
Size: A4
Date: 2026-07-05
Rev: 1.0
KiCad E.D.A. 9.0.6
Id: 1/1